PARLAYAN
AGRICULTURAL MACHINERY



www.parlayan.com.tr

Fertilizer Spreader



About Us

About Us

Founded in 1967 by Hacı Mustafa Zingil, Parlayan Agricultural Machinery has been a pioneering force in the advancement of agricultural technology. Today, under the second-generation leadership of A. Nuri Zingil and Eray Zingil, the company continues to expand its operational footprint while remaining firmly rooted in its core principles of integrity and manufacturing excellence.

Leveraging decades of specialized expertise in Agricultural Implements and Crop Protection Systems, Parlayan plays a pivotal role in accelerating global agricultural mechanization. We provide comprehensive support to modern farmers and agribusinesses worldwide, offering a highly engineered product portfolio that includes Precision Field Sprayers, Turbo Atomizers, and Orchard Atomizers.

Since our inception, our driving force has been a commitment to continuous innovation and the production of superior-quality machinery. Backed by a highly skilled technical team and an unwavering dedication to operational transparency, we consistently strive to exceed customer expectations. To guarantee maximum durability and field performance, our equipment is manufactured using certified raw materials and premium spare parts sourced exclusively from industry-leading global suppliers.

FERTILIZER SPREADER

PARLAYAN

NOVA
MOUNTED TYPE
VERTICAL MIXER



Tank Capacity

800 LT | 1000 LT | 1200 LT

1000LT DIMENSIONS

A	Width	: 170cm
B	Depth	: 110cm
C	Height	: 145cm
	Weight	: 250kg

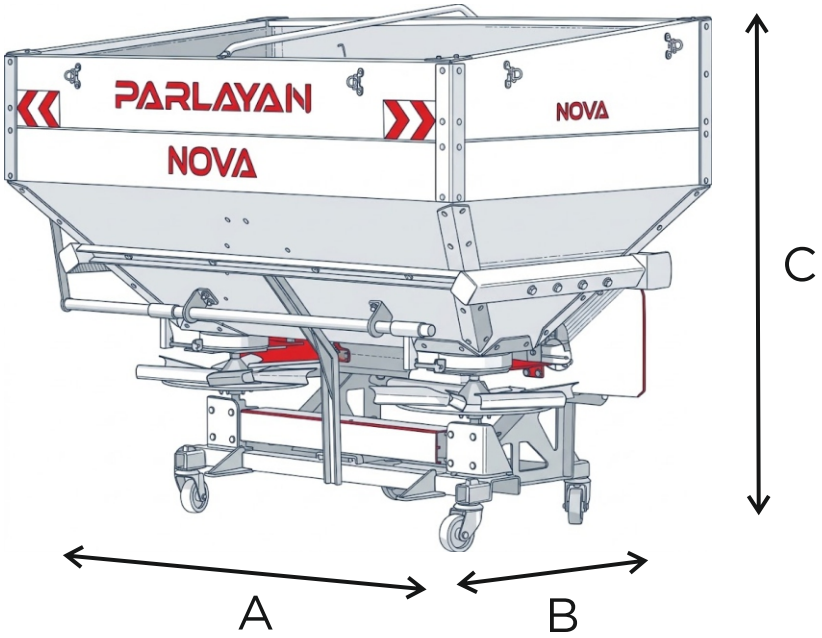

Working Width	6-24 Meter
PTO Speed (rpm)	540 rev/min
Working Speed	5-10 km/h
Spinner Discs	2 Pcs
Spinner Discs Type	6 Pcs Stainless
Min-Max Spreading Rate	5-75 kg/ha

PARLAYAN

SUPERNOVA MOUNTED TYPE VERTICAL MIXER



Tank Capacity

1250 LT	1500 LT	1750 LT
2000 LT	2500 LT	3000 LT

1750LT DIMENSIONS

A	Width	: 230cm
B	Depth	: 125cm
C	Height	: 150cm
	Weight	: 450kg

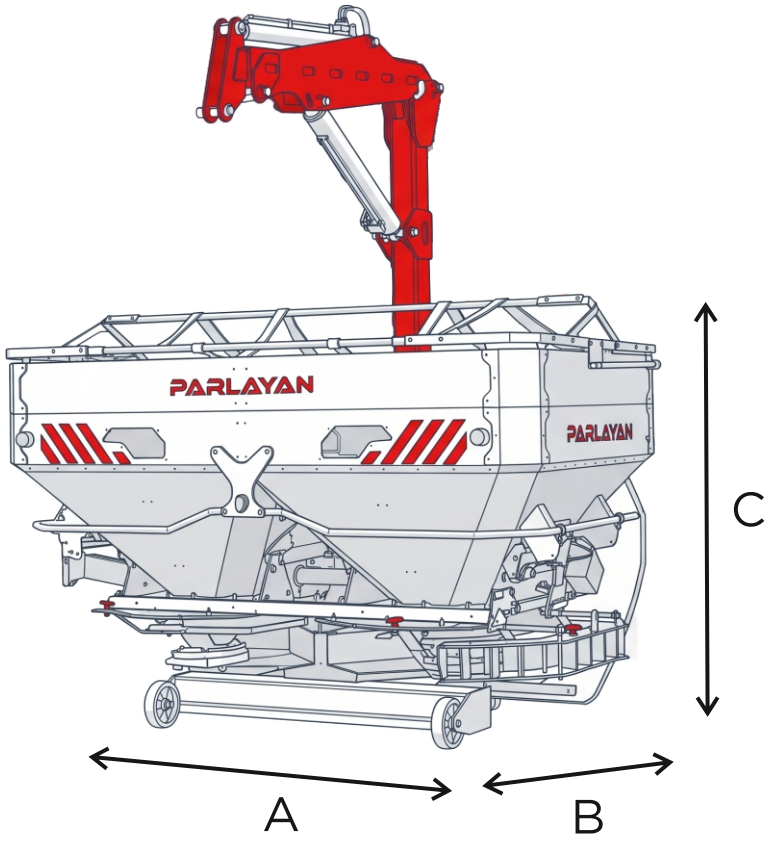

Working Width	6-24 Meter
PTO Speed (rpm)	540 rev/min
Working Speed	5-10 km/h
Spinner Discs	2 Pcs
Spinner Discs Type	2 Pcs Stainless
Min-Max Spreading Rate	5-75 kg/ha

PARLAYAN

HYPERNOVA MOUNTED TYPE VERTICAL MIXER



Tank Capacity

800 LT | 1150 LT | 1400 LT

1150LT DIMENSIONS

A	Width	: 230cm
B	Depth	: 125cm
C	Height	: 150cm
	Weight	: 470kg

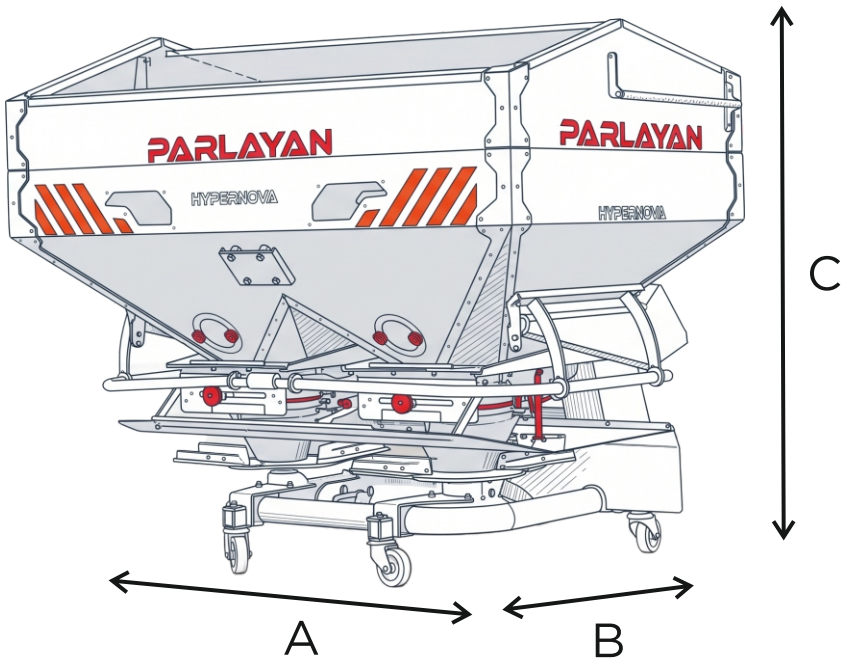

Working Width	6-24 Meter
PTO Speed (rpm)	540 rev/min
Working Speed	5-10 km/h
Spinner Discs	2 Pcs
Spinner Discs Type	6 Pcs Stainless
Min-Max Spreading Rate	5-75 kg/ha

PARLAYAN

HYPERNOVA PLUS TRAILED TYPE VERTICAL MIXER



Tank Capacity

1400 LT | 2000 LT | 3000 LT

1400LT DIMENSIONS

A	Width	: 240cm
B	Depth	: 125cm
C	Height	: 170cm
	Weight	: 480kg

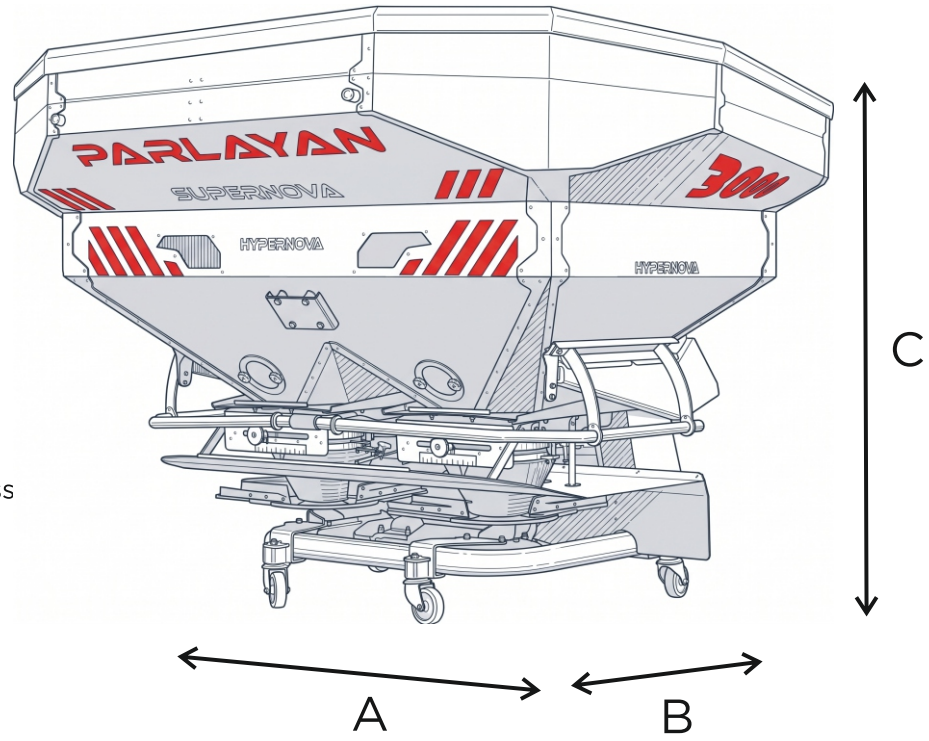

Working Width	6-24 Meter
PTO Speed (rpm)	540 rev/min
Working Speed	5-10 km/h
Spinner Discs	2 Pcs
Spinner Discs Type	6 Pcs Stainless
Min-Max Spreading Rate	5-75 kg/ha

PARLAYAN

HYPERNOVA GARDEN MOUNTED TYPE VERTICAL MIXER



Tank Capacity

600 LT | 800 LT | 1000 LT

1000LT DIMENSIONS

A	Width	: 230cm
B	Depth	: 125cm
C	Height	: 150cm
	Weight	: 450kg

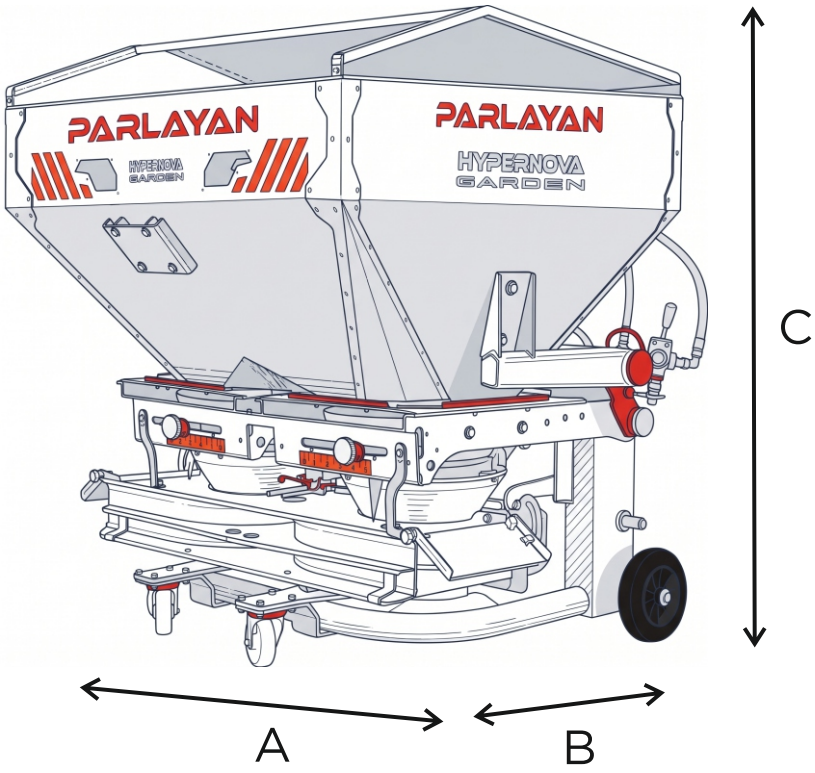

Working Width	6-24 Meter
PTO Speed (rpm)	540 rev/min
Working Speed	5-10 km/h
Spinner Discs	2 Pcs
Spinner Discs Type	6 Pcs Stainless
Min-Max Spreading Rate	5-75 kg/ha

FERTILIZER SPREADER

PARLAYAN

HYPERNOVA GARDEN PLUS MOUNTED TYPE VERTICAL MIXER



Tank Capacity

800 LT | 1150 LT | 1500 LT

1150LT DIMENSIONS

A	Width	: 245cm
B	Depth	: 125cm
C	Height	: 160cm
	Weight	: 470kg

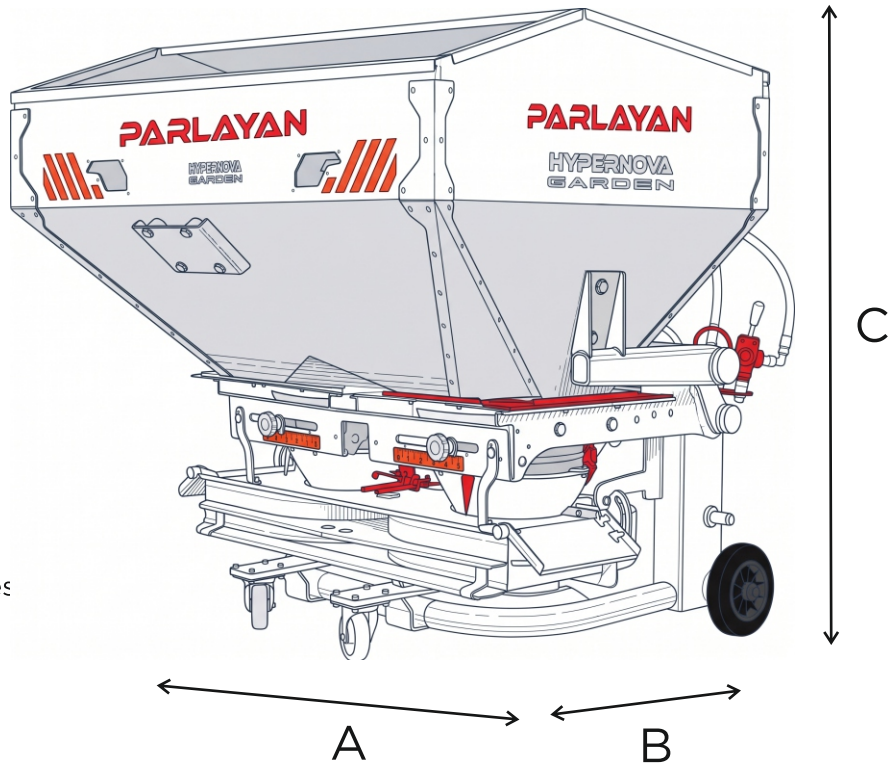

Working Width	6-24 Meter
PTO Speed (rpm)	540 rev/min
Working Speed	5-10 km/h
Spinner Discs	2 Pcs
Spinner Discs Type	6 Pcs Stainles
Min-Max Spreading Rate	5-75 kg/ha

PARLAYAN

SUPERNOVA TRAILED TYPE VERTICAL MIXER SINGLE AXLE



Tank Capacity

1250 LT	1500 LT	1750 LT
2000 LT	2500 LT	3000 LT

3000LT DIMENSIONS

A	Width	: 305cm
B	Depth	: 330cm
C	Height	: 265cm
	Weight	: 1150kg

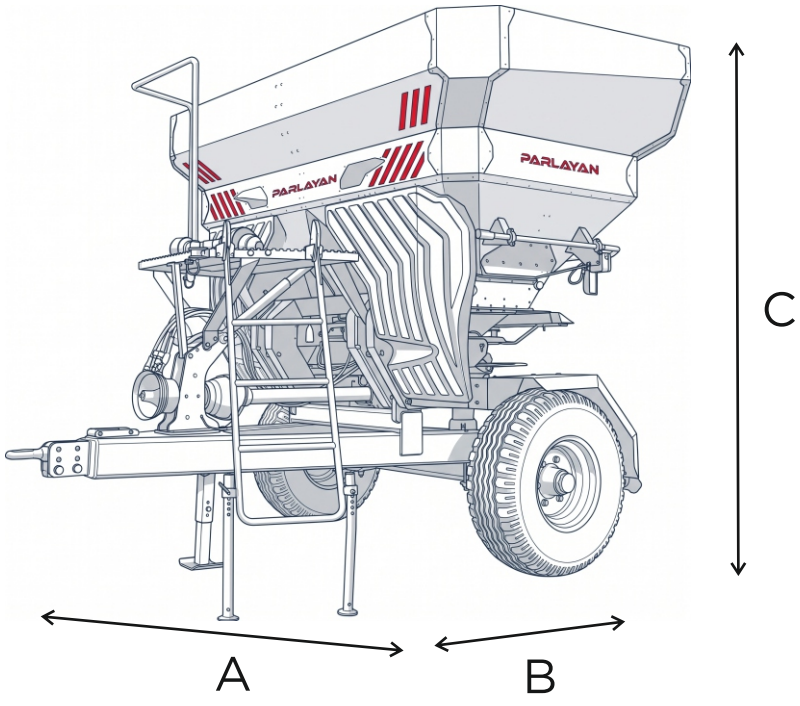

Working Width	12-24 Meter
PTO Speed (rpm)	540 rev/min
Working Speed	5-10 km/h
Spinner Discs	2 Pcs
Spinner Discs Type	2 Pcs Stainless
Min-Max Spreading Rate	5-75 kg/ha

PARLAYAN

SUPERNOVA TRAILED TYPE VERTICAL MIXER TANDEM



Tank Capacity

2250 LT | 2500 LT | 3000 LT | 4000 LT | 5000 LT

4000LT DIMENSIONS

A	Width	: 300cm
B	Depth	: 300cm
C	Height	: 305cm
	Weight	: 1200kg

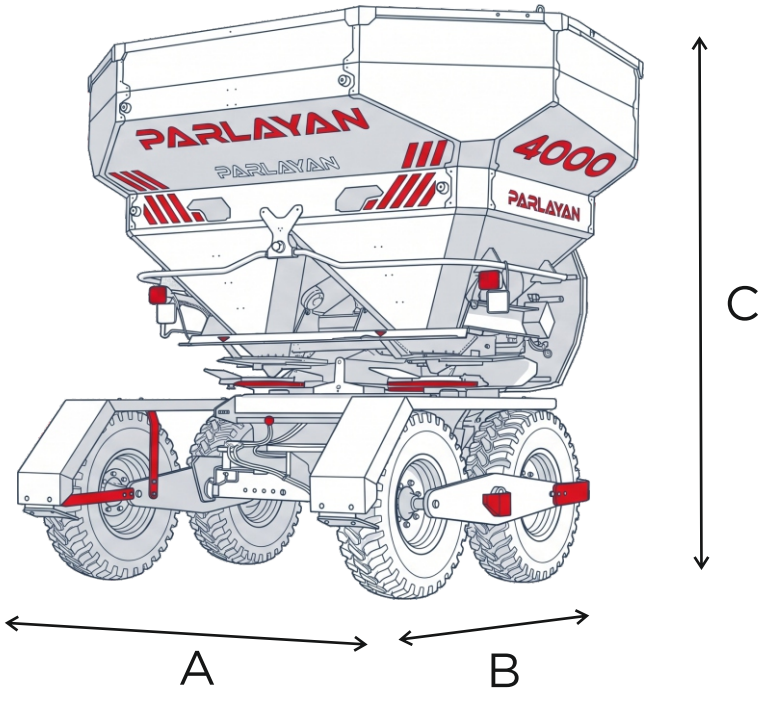

Working Width	6-24 Meter
PTO Speed (rpm)	540 rev/min
Working Speed	5-10 km/h
Spinner Discs	2 Pcs
Spinner Discs Type	6 Pcs Stainless
Min-Max Spreading Rate	5-75 kg/ha

PARLAYAN



Address
Muradiye Sanayi Bölgesi
Muradiye Mah. 10. Sokak, No:42,
Yunusemre, Manisa, TÜRKİYE

Phone
+90 541 690 82 38
+90 549 545 54 56

Email
info@parlayan.com.tr

Web
www.parlayan.com.tr